DocuSign Envelope ID: 51C271F2-AF89-46BA-B09A-719797789DE7

PROJ. REFERENCE NO.	SHEET NO.
B-6032	TMP-3

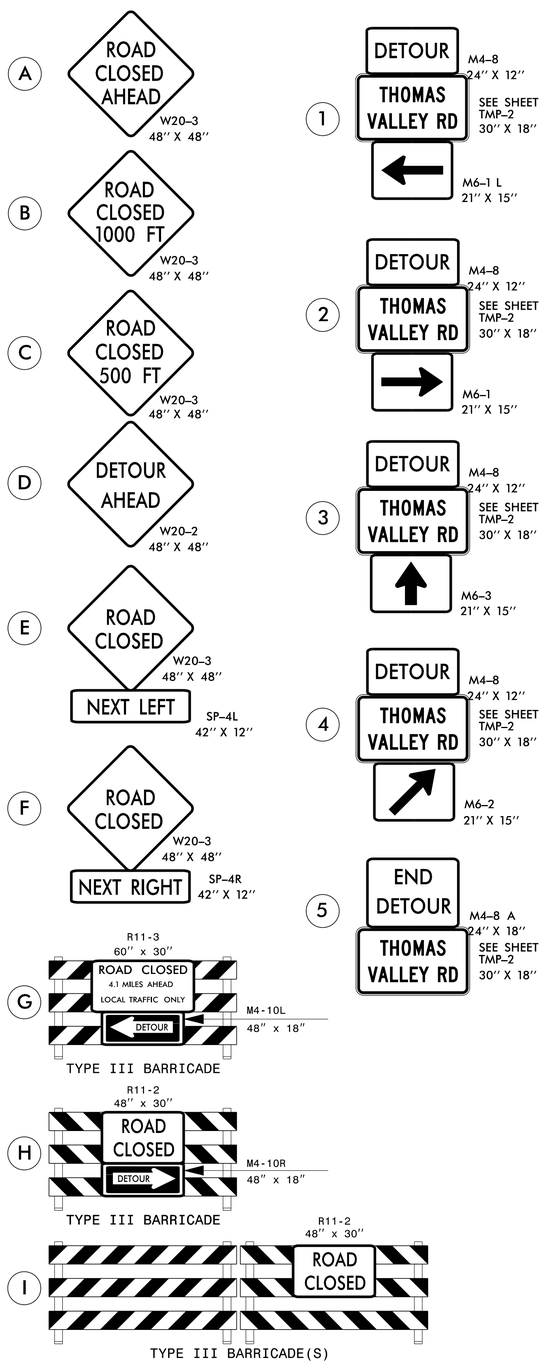

INSET A

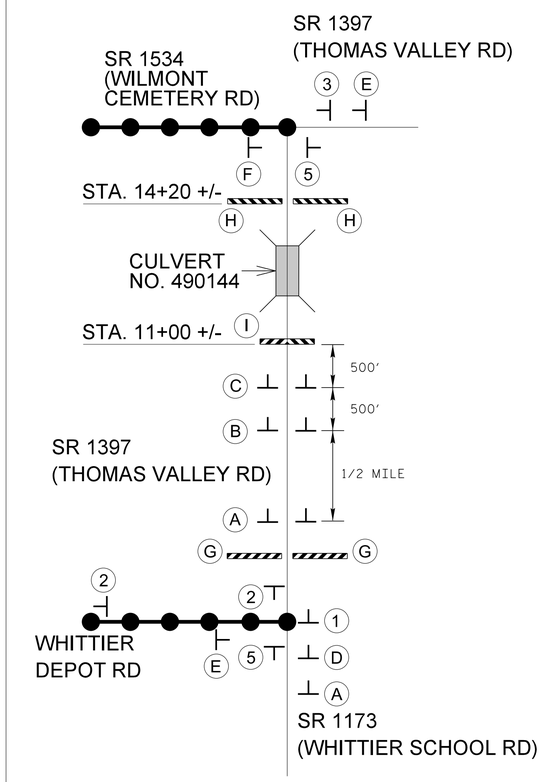

N.T.S.

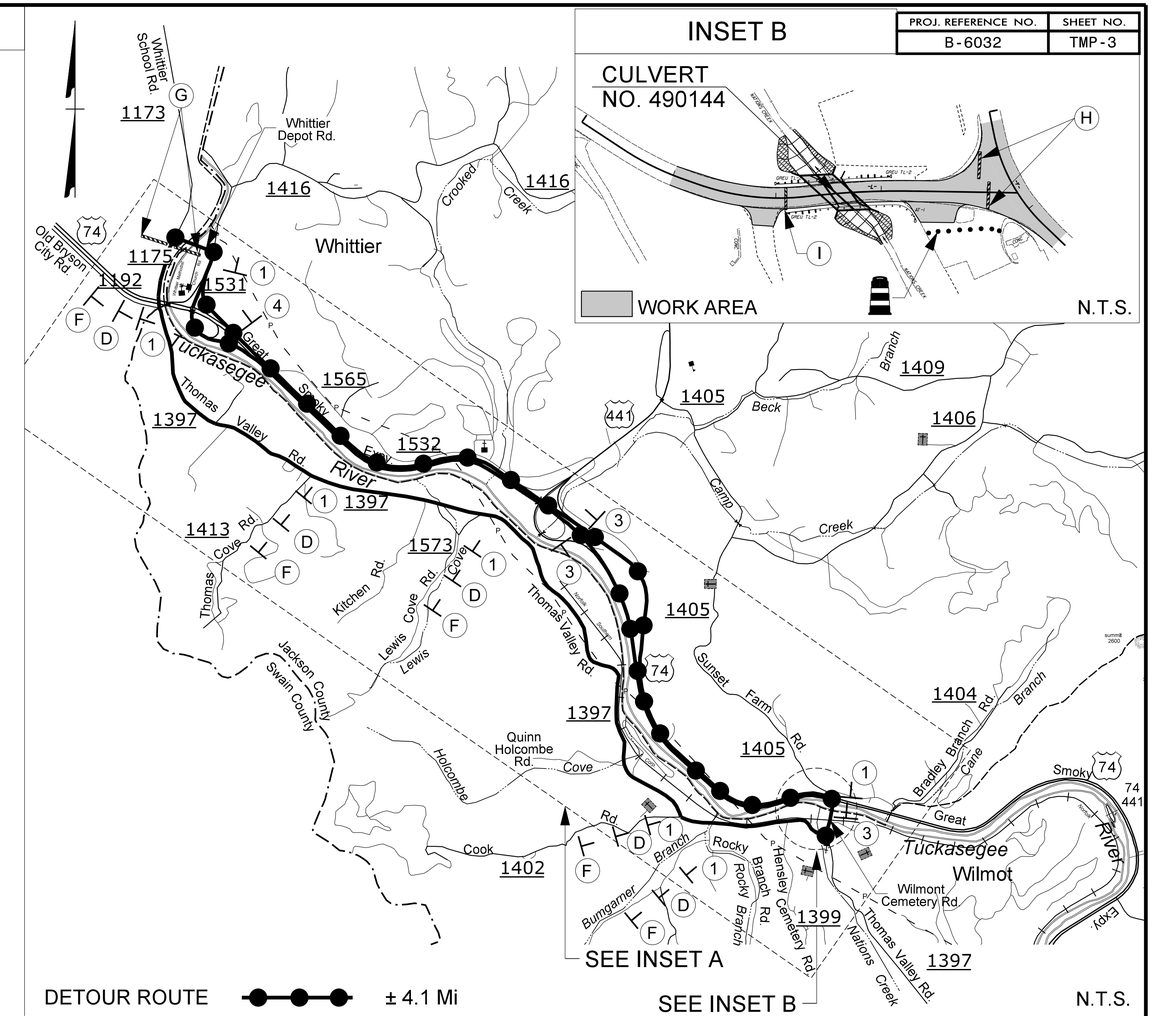

INSET B

DETOUR ROUTE ±4.1 Mi

N.T.S.

PHASING

STEP 1: - USING ROADWAY STANDARD DRAWING NO. 1101.03, SHEETS 1 AND 2 OF 9, INSTALL ROAD CLOSURE AND DETOUR SIGN ASSEMBLIES, PLACE TYPE III BARRICADES FOR THE CLOSING OF SR 1397 (THOMAS VALLEY ROAD, -L-) TO THROUGH TRAFFIC, AND DETOUR TRAFFIC OFF-SITE.

NOTE: INSTALL TYPE III BARRICADES TO CLOSE SR 1397 (THOMAS VALLEY ROAD, -L-) AT -L- STA. 11+00 ± AND AT -L- STA. 14+20 ±.

STEP 2: - AWAY FROM TRAFFIC, REMOVE THE EXISTING STRUCTURE AND CONSTRUCT THE PROPOSED STRUCTURE AND ROADWAY UP TO AND INCLUDING THE FINAL LAYER OF SURFACE COURSE AND PLACE FINAL PAVEMENT MARKINGS ON 1397 (THOMAS VALLEY ROAD, -L-) FROM -L- STA. 11+00 ± TO -L- STA. 14+29 ± (SEE CONSTRUCTION PLANS).

STEP 3: - USING ROADWAY STANDARD DRAWING NO. 1101.02, SHEET 1 OF 14, RESURFACE SR 1397 (THOMAS VALLEY ROAD, -Y-) AND SR 1534 (WILMONT CEMETERY ROAD, -Y-) FROM -Y- STA. 10+10 ± TO -Y- STA. 11+41 ± (SEE CONSTRUCTION PLANS).

STEP 4: - ONCE ALL CONSTRUCTION IS COMPLETE, REMOVE ALL STATIONARY AND OFF-SITE DETOUR SIGNS AND ALL REMAINING TRAFFIC CONTROL DEVICES.

STEP 5: - OPEN SR 1397 (THOMAS VALLEY ROAD, -L-) TO FINAL TRAFFIC PATTERN.

NOTES

- ALL DETOUR SIGN LOCATIONS ARE APPROXIMATE.
- ALL DETOUR SIGNS ARE BLACK ON ORANGE UNLESS OTHERWISE NOTED.
- TRAFFIC CONTROL DEVICES (A) THROUGH (I) SHALL BE INSTALLED ACCORDING TO ROADWAY STANDARD DRAWING 1101.03, SHEETS 1 AND 2 OF 9.
- TRAFFIC CONTROL DEVICES (1) AND (5) SHALL BE INSTALLED AS PER ENGINEER'S INSTRUCTIONS, AND AS SHOWN HEREON.
* SEE ROADWAY STANDARD DRAWING NO. 1101.03, SHEETS 1 AND 2 OF 9, FOR ADDITIONAL WORK ZONE SIGNS.

DOCUMENT NOT CONSIDERED FINAL UNLESS ALL SIGNATURES COMPLETED

DocuSigned by:
APPROVED: Lloyd D. Brown DATE: 12/8/2021
C5B0A3B1F1F4D4...

NORTH CAROLINA PROFESSIONAL SEAL 20119 ENGINEER LLOYD D. BROWN

DIVISION OF HIGHWAYS
STATE OF NORTH CAROLINA
DEPARTMENT OF TRANSPORTATION
WORK ZONE TRAFFIC CONTROL

TEMPORARY TRAFFIC CONTROL DETAIL, OFF-SITE DETOUR SIGNING, ROAD CLOSURE, AND PHASING

12/6/2021 10:19:03 AM
...\T(CP\490144_TMP-3.dgn
User:amfitzpatrick